MS

Stratos *MS*

Digital Memosens Transmitter

Reasonably Priced Multi-Parameter Memosens Transmitter

The digital platform.

Multi-parameter transmitter

With the Stratos MS, Knick is now offering a low-cost, purely digital version of its Stratos analyzers that can be configured to measure pH value, ORP, conductivity (conductive or inductive) and dissolved oxygen.

Designed for digital Memosens sensors, the Stratos MS is the counterpart to the Stratos Eco analog analyzer.

Unique user interface

The self-explanatory user interface guarantees comfortable and intuitive handling.

2-color backlit display

A large, high-contrast LC display simultaneously indicates measured values and temperature in plain text as well as measurement symbols.

In normal measuring mode the display is backlit white.

The alarm status has a particularly noticeable red display color and is also signaled by flashing display values. Invalid inputs or false passcodes cause the entire display to flash red so that operating errors are significantly reduced.

Internationally recognizable icons provide operating information and draw attention to unusual operating states.

Shatter-proof and corrosion-resistant housing

The robust PBT housing with IP 65 protection is suitable for wall, pipe or panel mounting. It is outdoor-rated and UV resistant. Empty polymer housings and plug terminals that can be pre-assembled make installation easier.

Ex Zone 2

The 4-wire analyzer is suitable for use in hazardous areas of Ex Zone 2.

VariPower broad-range power supply

The included VariPower broad-range power supply is suitable for all standard supply voltages and guarantees trouble-free use even with large fluctuations in the power grid.

The Stratos MS by Knick is covered by a three-year warranty.

MEMOSENS

3 years warranty!

Facts and features

- Operation of digital Memosens sensors
- One device for pH/ORP, conductivity or oxygen (configurable)
- Comprehensive features and flexibility enable universal application.
- Approved for Ex Zone 2 (IECEx, ATEX)
- 2-color backlit display: white for measuring, red for alarm
- Logbook as standard
- Global use thanks to broad-range power supply
- Very simple ordering and inventory management

Knick

White:
Measuring mode

Red flashing:
Alarm, error

PH

ORP

COND

CONDI

OXY

MEMOSENS

MS

Product Range

Stratos MS	Order No.
Stratos MS 4-wire, multiparameter, digital	A405N
Stratos MS 4-wire, multiparameter, digital, Ex Zone 2	A405B

Accessories	
Pipe-mount kit	ZU 0274
Panel-mount kit	ZU 0738
Protective hood	ZU 0737

Wiring example

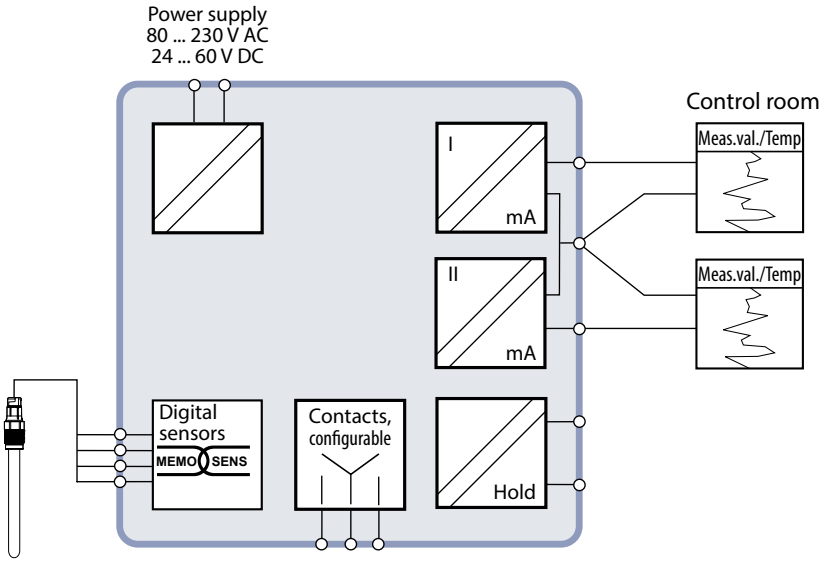

Terminal assignments of A405N (non-Ex)

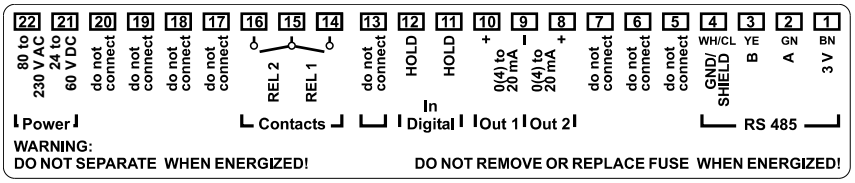

Terminal assignments of A405B (Ex)

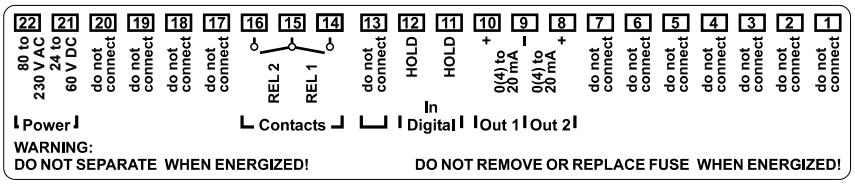

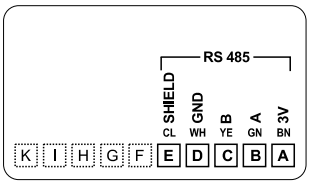

Specifications	**"Device Type" pH**		
Sensor input, digital	Memosens pH or ORP sensors		
	Display range	pH value	-2.00 ... 16.00
		ORP	-1999 ... 1999 mV
		Temperature	-20.0 ... 200.0 °C (–4 ... +392 °F)
	Measurement error	See sensor specifications	
pH sensor standardization*)	pH calibration		
Operating modes	AUTO – Calibration with automatic buffer recognition (Calimatic)		
	MAN – Manual calibration with input of individual buffer values		
	DAT – Data entry of premeasured electrodes		
	Product calibration		
Calimatic buffer sets*)	–01– Mettler-Toledo	2.00/4.01/7.00/9.21	
	–02– Knick CaliMat	2.00/4.00/7.00/9.00/12.00	
	–03– Ciba (94)	2.06/4.00/7.00/10.00	
	–04– NIST technical	1.68/4.00/7.00/10.01/12.46	
	–05– NIST standard	1.679/4.006/6.865/9.180	
	–06– HACH	4.01/7.00/10.01	
	–07– WTW techn. buffers	2.00/4.01/7.00/10.00	
	–08– Hamilton	4.01/7.00/10.01/12.00	
	–09– Reagecon	2.00/4.00/7.00/9.00/12.00	
	–10– DIN 19267	1.09/4.65/6.79/9.23/12.75	
	–U1– User defined	Specifiable buffer set with 2 buffer solutions	
	Max. calibration range	Asymmetry potential	±60 mV
		Slope	80 ... 103 % (47.5 ... 61 mV/pH)
ORP sensor standardization*)	ORP calibration (zero adjustment)		
	Max. calibration range	-700 ... +700 ΔmV	
Adaptive calibration timer	Interval	0 ... 9999 h	
Sensocheck	Automatic monitoring of glass electrode		
	Delay	Approx. 30 s	
Sensoface	Provides information on the sensor condition (can be switched off)		
	Evaluation of zero/slope, response, calibration interval, Sensocheck, wear		
Sensor monitor	Direct display of measured values from sensor for validation (mV/temperature)		
TC of process medium*)	Linear -19.99 ... +19.99 %/K, ultrapure water, reference temp 25 °C		
	Table: 0 … 95 °C, user-defined in 5-K steps		

*) user-defined

Oxygen Measurement

Specifications	**"Device Type" Oxy**	
Sensor input, digital	Memosens oxygen sensors	
	Operating modes	GAS (measurement in gases)
		DO (measurement in liquids)
Measuring ranges	Saturation (–10 ... 80 °C)	0.0 ... 600.0 %
	Concentration (-10 ... 80 °C)	0.00 ... 99.99 mg/l (ppm)
	Volume concentration in gas	0.00 ... 99.99 %vol
	Measurement error	See sensor specifications
Input correction*)	Pressure correction	0.000 ... 9.999 bar / 999.9 kPa / 145.0 PSI
	manually or through current input 0(4) ... 20 mA	
	Salinity correction	0.0 ... 45.0 g/kg
Sensor standardization*)	CAL_AIR	Automatic calibration in air
	CAL_WTR	Automatic calibration in air-saturated water
	P_CAL	Product calibration
	CAL_ZERO	Zero calibration
Calibration ranges	Zero point	±2 nA
	Slope	25 ... 130 nA (at 25 °C, 1013 mbar)
	Pressure correction*)	Manual 0.000 ... 9.999 bars / 999.9 kPa / 145.0 PSI
Sensocheck	Sensor failure, sensor cap missing	
	Delay	Approx. 30 s
Sensoface	Provides information on the sensor condition (can be switched off)	
	Evaluation of zero/slope, response, calibration interval, Sensocheck	
Sensor monitor	Direct display of measured values from sensor for validation: sensor current or oxygen partial pressure / temperature	

*) user-defined

Specifications	**"Device Type" Cond**		
Sensor input, digital	Memosens conductivity sensors		
Display ranges	Conductivity	0.000 ... 9.999 µS/cm	
		00.00 ... 99.99 µS/cm	
		000.0 ... 999.9 µS/cm	
		0000 ... 9999 µS/cm	
		0.000 ... 9.999 mS/cm	
		00.00 ... 99.99 mS/cm	
		000.0 ... 999.9 mS/cm	
		0.000 ... 9.999 S/cm	
		00.00 ... 99.99 S/cm	
	Resistivity	00.00 … 99.99 MΩ · cm	
	Concentration	0.00 ... 100 %	
	Salinity	0.0 ... 45.0 ‰	
	Measurement error	See sensor specifications	
Measuring ranges	See Memosens sensor		
Temperature compensation*)	(OFF)	Without	
	(LIN) Ref. temp specifiable	Linear characteristic 00.00 ... 19.99 %/K	
	(NLF) Reference temp 25 °C	Natural waters acc. to EN 27888	
	(NaCl) Reference temp 25 °C	NaCl from 0 (ultrapure water) to 26% by wt	
	(HCl) Reference temp 25 °C	Ultrapure water with HCl traces (0 ... 120 °C)	
	(NH_3) Reference temp 25 °C	Ultrapure water with NH_3 traces (0 ... 120 °C)	
	(NaOH) Reference temp 25 °C	Ultrapure water with NaOH traces (0 ... 120 °C)	
Concentration determination*)	–01– NaCl	0.00 … 9.99 % by wt	(0 … 100 °C)
	–02– HCl	0.00 … 9.99 % by wt	(-20 … 50 °C)
	–03– NaOH	0.00 … 9.99 % by wt	(0 … 100 °C)
	–04– H_2SO_4	0.00 … 9.99 % by wt	(-17 … 110 °C)
	–05– HNO_3	0.00 … 9.99 % by wt	(-17 … 50 °C)
Sensor standardization	– Input of cell constant with simultaneous display of conductivity/temp.		
	– Input of cal. solution conductivity with simultaneous display of cell constant/temp.		
	– Product calibration for conductivity		
	– Temp probe adjustment (10 K)		
	Permissible cell constant	0.0050 … 19.9999/cm	
Sensocheck	Polarization detection		
	Delay	Approx. 30 s	
Sensoface	Provides information on the sensor condition		
Sensor monitor	Direct display of measured values from sensor for validation (resistance/temperature)		

*) user-defined

Specifications	**"Device Type" CondI**	
Sensor input, digital	Digital toroidal conductivity sensors (SE 670 / SE 680)	
Measuring ranges	Conductivity	0.000 ... 1999 mS/cm
	Concentration	0.00 ... 100.0 % by wt
	Salinity	0.0 ... 45.0 ‰ (0 ... 35 °C)
Measuring ranges	Conductivity	0.000 ... 9.999 mS/cm
		00.00 ... 99.99 mS/cm
		000.0 ... 999.9 mS/cm
		0000 ... 1999 mS/cm
		0.000 ... 9.999 S/m
		00.00 ... 99.99 S/m
	Concentration	0.00 ... 9.99 % / 10.0 ... 100.0 %
	Salinity	0.0 ... 45.0 ‰ (0 ... 35 °C)
	Response time (T90)	Approx. 1 s
	Temperature	-20 ... +150 °C (-4 ... +302 °F)
	Temperature extrapolation	Quick extrapolation of the temperature using the TICK method in the case of a significant change (SE 670 / SE 680)
	Measurement error	See sensor specifications
Temperature compensation*)	(OFF)	Without
	(Lin)	Linear characteristic 00.00 to 19.99 %/K
	(NLF)	Natural waters acc. to EN 27888
	(NaCl)	NaCl from 0 to 26% by wt (0 ... 120 °C)
Concentration determination*)	–01– NaCl	0 – 26% by wt (0 °C) ... 0 – 28% by wt (100 °C)
	–02– HCl	0 – 18% by wt (-20 °C) ... 0 – 18 Gew % (50 °C)
	–03– NaOH	0 – 13% by wt (0 °C) ... 0 – 24% by wt (100 °C)
	–04– H_2SO_4	0 – 26% by wt (-17 °C) ... 0 – 37% by wt (110 °C)
	–05– HNO_3	0 – 30% by wt (-20 °C) ... 0 – 30% by wt (50 °C)
	-06– H_2SO_4	94 – 99% by wt (-17 °C) ... 89 – 99% by wt (115 °C)
	-07– HCl	22 – 39% by wt (-20 °C) ... 22 – 39% by wt (50 °C)
	-08– HNO_3	35 – 96% by wt (-20 °C) ... 35 – 96% by wt (50 °C)
	-09– H_2SO_4	28 – 88% by wt (-17 °C) ... 39 – 88% by wt (115 °C)
	-10– NaOH	15 – 50% by wt (0 °C) ... 35 – 50% by wt (100 °C)
Sensor standardization	– Input of cell factor with simultaneous display of conductivity/temperature – Input of cal. solution conductivity with simultaneous display of cell factor/temp. – Product calibration – Zero adjustment – Installation factor – Temp probe adjustment (10 K)	
	Permissible cell factor	00.100 ... 19.999/cm
	Permissible transfer ratio	010.0 ... 199.9
	Permissible zero offset	±0.5 mS/cm
	Permissible installation factor	0.100 … 5.000
Sensocheck	Monitoring of primary and secondary coils and lines for open circuit and of primary coil and lines for short circuit	
	Delay	Approx. 30 s
Sensoface	Provides information on the sensor condition (zero point, cell factor, installation factor, Sensocheck)	
Sensor monitor	Direct display of measured values from sensor for validation (resistance/temperature)	

*) user-defined

General Data

Specifications

HOLD input	Galvanically separated (OPTO coupler)		
	Function	Switches device to HOLD mode	
	Switching voltage	0 ... 2 V (AC/DC)	HOLD inactive
		10 ... 30 V (AC/DC)	HOLD active
Output 1	0/4 ... 20 mA, max. 10 V, floating (galvanically connected to output 2)		
	Overrange*)	22 mA in the case of error messages	
	Characteristic	Linear, with conductivity measurement also bilinear or logarithmic	
	Output filter*)	PT_1 filter, time constant 0 ... 120 s	
	Measurement error[1)]	< 0.25% current value + 0.025 mA	
Output 2	0/4 ... 20 mA, max. 10 V, floating (galvanically connected to output 1)		
	Overrange*)	22 mA in the case of error messages	
	Characteristic	Linear, with conductivity measurement also bilinear or logarithmic	
	Output filter*)	PT_1 filter, time constant 0 ... 120 s	
	Measurement error[1)]	< 0.25% current value + 0.025 mA	
Contact 1	Relay contact, floating, definable for alarm, wash or limit value		
	Contact ratings	AC < 250 V / < 3 A / < 750 VA	
		DC < 30 V / < 3 A / < 90 W	
	Contact response*)	N/C (fail-safe type)	
	Response delay*)	0000 ... 9999 s	
	Limit value: setpoint*)	As desired within range	
	Limit value: hysteresis*)	User-defined	
Contact 2	Relay contact, floating, definable for alarm, wash or limit value		
	Contact ratings	AC < 250 V / < 3 A / < 750 VA	
		DC < 30 V / < 3 A / < 90 W	
	Contact response*)	N/C or N/O	
	Response delay*)	0000 ... 9999 s	
	Limit value: setpoint*)	As desired within range	
	Limit value: hysteresis*)	User-defined	
Real-time clock	Different time and date formats selectable		
	Power reserve	> 5 days	
Display	LC display, 7-segment with icons, white backlighting, red for alarm		
	Main display	Character height approx. 22 mm	
		Unit symbols approx. 14 mm	
	Secondary display	Character height approx. 10 mm	
	Text line	14 characters, 14 segments	
	Sensoface	3 status indicators	
		(friendly, neutral, sad smiley).	
	Mode Indicators	meas, cal, conf, diag	
		Further icons for configuration and messages	
	Alarm indication	Display blinks, red backlighting	
Keypad	Buttons	meas, info, 4 cursor keys, enter	
Diagnostics functions	Calibration data	Depending on the selected process variable	
	Device self-test	Automatic memory test (RAM, FLASH, EEPROM)	
	Display test	Display of all segments	
	Logbook	Recording of events,	
		100 entries	

Specifications

Service functions	Current source	Current specifiable for output 1 and 2 (00.00 ... 22.00 mA)
	Sensor monitor	Display of direct sensor signals
	Relay test	Manual control of relay contacts
	Device type	Selecting the measuring function (pH, Cond, CondI, Oxy)
Data retention	Parameters, calibration data, logbook > 10 years (EEPROM)	
Electrical safety	Protection against electric shock by protective separation of all extra-low-voltage circuits against mains according to EN 61010-1	
Explosion protection (A405B)	Global	IECEx Zone 2, 22
	Europe	ATEX Zone 2, 22
EMC	EN 61326	
	Emitted interference	Class B (residential area)
	Immunity to interference	Industry
RoHS conformity	according to EC directive 2002/95/EC	
Power supply	80 V (-15%) ... 230 (+10%) V AC ; ≤ 10 W ; 45 … 65 Hz	
	24 V (-15%) … 60 (+10%) V DC ; 10 W	
	Overvoltage category II, protection class II	
Nominal operating conditions	Ambient temperature	-20 ... +55 °C
	Transport/Storage temperature	-30 ... +70 °C
	Relative humidity	10 ... 95% not condensing
Housing	Molded enclosure made of PBT/PC, glass-reinforced	
	Mounting	Wall, pipe/post or panel mounting
	Color	Gray, RAL 7001
	Ingress protection	IP 67 / NEMA 4X outdoor (with pressure compensation)
	Flammability	UL 94 V-0
	Dimensions	H 148 mm, W 148 mm, D 117 mm
	Control panel cutout	138 mm x 138 mm to DIN 43 700
	Weight	1.2 kg
	Cable glands	3 knockouts for M20 x 1.5 cable glands 2 knockouts for NPT ½" or rigid metallic conduit
	Connections	Terminals, conductor cross section max. 2.5 mm^2

*) user-defined

1) according to EN 60746-1, at nominal operating conditions

Easy installation

- Wall, post/pipe or panel mounting
- All parts are easily accessible
- Large terminal compartment
- Rear unit can be pre-installed
- Also suitable for rigid metallic conduits
- Replaceable screw terminals
- Replacing the electronics without new cabling

ZU 0274 pipe-mount kit

For mounting on vertical or horizontal posts or pipes.

ZU 0737 protective hood

Additional protection from direct weather exposure and mechanical damage.

ZU 0738 panel-mount kit

For mounting in standardized panel cutout 138 x 138 mm (DIN 43700), sealed against panel.

Dimension drawings

Front and side view

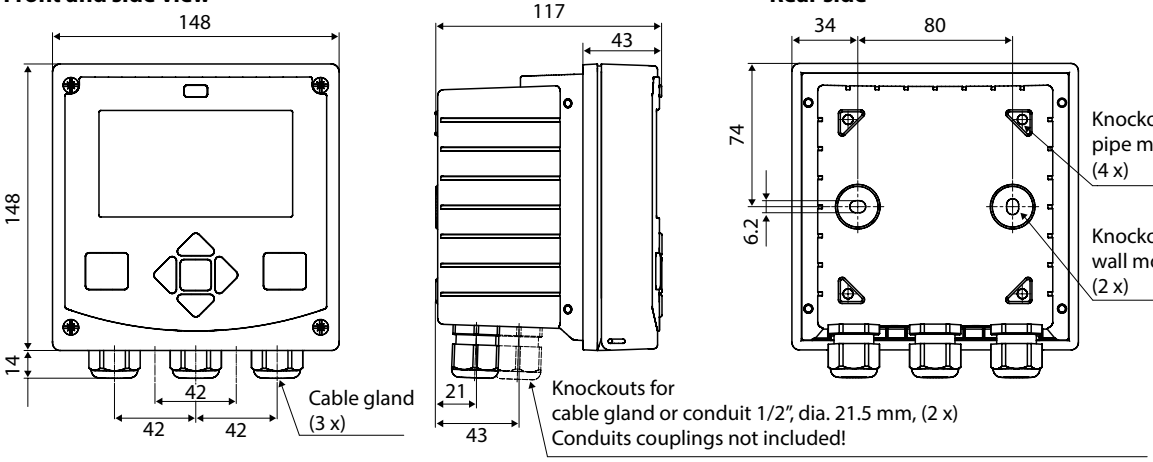

Rear side

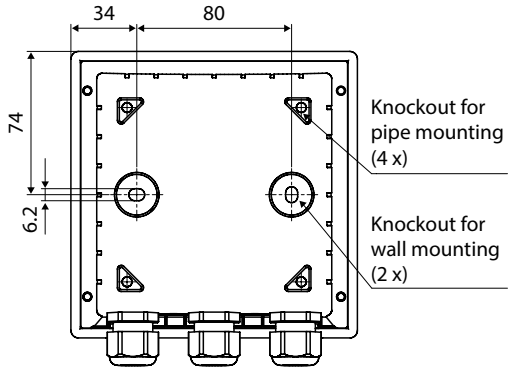

ZU 0274 pipe-mount kit

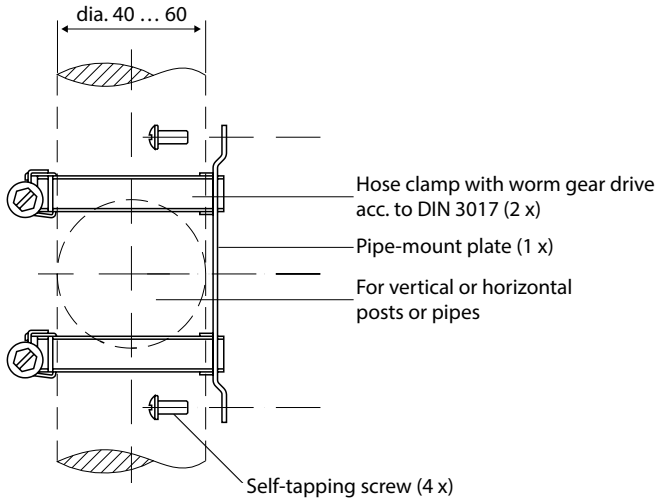

ZU 0738 panel-mount kit

Cutout 138 x 138 mm (DIN 43700)

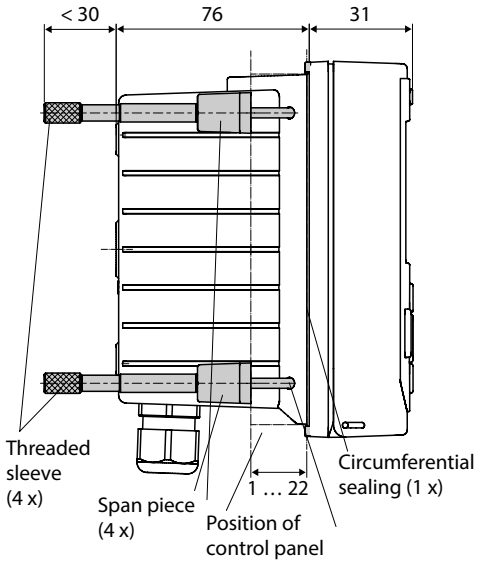

ZU 0737 protective hood

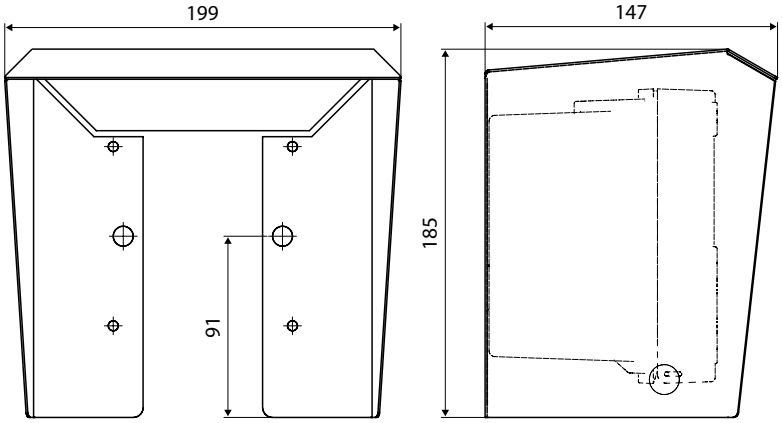

All dimensions in mm