Ceramat WA 153

Retractable fitting with ceramic sealing for extreme conditions

The Ceramat WA 153 retractable fitting enables the reliable, automatic cleaning and calibration of 12 mm sensors without process interruption, ensuring reliable process management. Thanks to their indestructible ceramic sealing to the process, Ceramat retractable fittings are suitable for particularly complex measuring tasks for a wide range of applications in which conventional fittings typically fail. And the special design accommodates the use of optical probes. The sensor receives a steady stream of data since measurement is no longer affected by conventional immersion tube design.

Applications

Highly corrosive processes (chlorine production, phosgenation) and processes with depositing, abrasive and incrusting solids. Flue gas desulfurization, gas scrubbers, sugar production, dyes and pigment synthesis, special incrusting industrial wastewaters.

Facts and Features

- For extreme conditions
- Ceramic sealing to the process:
  - Extremely high hardness (Mohs hardness 9) prevents sealing surface wear in abrasive media.
  - Virtually wear-resistant
  - High, permanent tightness due to lapped and polished sealing surfaces
  - High mechanical strength
  - High temperature stability
  - High chemical resistance
  - Sterilizable
- Plug & play for all process media thanks to central multiplug
- Contamination-resistant design with smooth surfaces
- All maintenance work possible on site
- Drive easy to replace under process conditions
- Cyclone rinsing for optimum cleaning effect
- Cavity rinsing for accurate measured values and improved hygiene
- Sensor dismount guard in conjunction with Uniclean 900/ Unical 9000
- Superior sensor immersion depth
- Standard sensor length (225 mm)
- Special version for electrodes with pressurizable liquid electrolyte (for 250 mm sensors with electrolyte reservoir)
- Wetted outer body made of stainless steel 1.4404, PEEK, Hastelloy C22 or titanium
- Special designs for optical probes:
  - Torsion prevention for fiber optic cable thanks to special rotary fitting
  - Bracket for holding the corrugated conduit that contains the fiber optic cables

Ceramat WA 153

Product Range

Basic Unit	WA 153-																–		
Explosion protection	ATEX Zone 0	X																	
	Without	N																	
Sensor	Sensor, Ø 12 mm, with PG 13.5		0																
	pH sensor, Ø 12 mm, pressurized		1																
	Optical sensor, Ø ½" (12.7 mm)		2																
	Optical sensor, Ø 12 mm		3																
Gasket material	FKM			A															
	EPDM			B															
	EPDM - FDA			E															
	FKM - FDA			F															
	FFKM - FDA			H															
	FFKM			K															
Sensor protection tube	Hastelloy C22				B														
	PEEK				E														
	1.4404				H														
	Titanium				T														
Sensor socket	Hastelloy C 22, without protection					B	0												
	Hastelloy C 22, short protection					B	1												
	1.4404, without protection					H	0												
	1.4404, short protection					H	1												
	1.4404, long protection					H	2												
	1.4404, full protection					H	3												
	PEEK, without protection					E	0												
	Titanium, without protection					T	0												
	Titanium, short protection					T	1												
Scraper for sensor socket	Without							0											
	PEEK, natural							1											
Immersion depth	Special immersion depth 23-104 mm (1 mm increments)								0	0	0								
	Immersion depth 105 mm (max.)								1	0	5								
Fitting material, wetted	Hastelloy C22											B							
	1.4404											H							
	Titanium											T							
Process connection	Flange, loose, 1.4571, PN10/16, DN 50												B	1					
	Flange, loose, 1.4571, PN10/16, DN 65												B	2					
	Flange, loose, 1.4571, PN10/16, DN 80												B	3					
	Flange, loose, 1.4571, PN10/16, DN 100												B	4					
	Flange, loose, 1.4571, PN40, DN 50												E	1					
	Flange, loose, 1.4571, PN40, DN 65												E	2					
	Flange, loose, 1.4571, PN40, DN 80												E	3					
	Flange, loose, 1.4571, PN40, DN 100												E	4					
	Dairy pipe DN 50												C	1					
	Dairy pipe DN 65												C	2					
	Dairy pipe DN 80												C	3					
	Flange, loose, ANSI 316, 150 lbs, 2"												D	1					
	Flange, loose, ANSI 316, 150 lbs, 3"												D	3					
	Clamp 2.5"												J	3					
	BioControl, 1.4404, DN 65												L	2					
	Varivent, 1.4404 (≥ DN 50)												V	1					
Probe guard	Without														0				
	With, version 1														1				
Special version	Without															0	0	0	
	Inlet and outlet made of 1.4404																	K	

Further configurations of these options may be available on request.

Specifications

Permissible process temperature	During movement	5 ... 120 °C, briefly (30 min.) 140 °C
Permissible process pressure	During movement	10 bar (at 0 ... 140 °C)
	Static in service position	16 bar (at 0 ... 40 °C)
Ambient temperature	-10 ... 70 °C	
Protection	IP 66	
Permissible pressure for probe control	4 ... 7 bar	
Immersion depth	Approx. 135 mm, depending on process connection	
Process connection	Flanges DN 50/DN 65/DN 80/DN 100	Flanges ANSI 2", 2 ½", 3", 3½", 4"
	Dairy-pipe screw joint DN 50/DN 65/DN 80/DN 100	
	Clamp 2.5"	BioControl, 1.4404, DN 65
	Varivent, 1.4404 (≥ DN 50)	
Outlet	Connection for hose nipple with coupling nut (Unical 9000/Uniclean 900) Internal shut-off by ceramic disks	
Inlet	Connection for multi-plug connection Unical/Uniclean Internal shut-off by ceramic disks	
Sensors	With solid electrolyte	Ø 12 mm, length 225 mm with temperature detector, thread PG 13.5
Special functions	Rinsing interior cavities	
	with liquid electrolyte	Ø 12 mm, length 250 mm with temp detector
	Optical sensors	Ø 12 mm, Ø 12.7 mm (½")
Process connections	See product code	
Connections	Outlet	Socket for Unical media hose
	For pressurized sensors	Hose connection NW 6 Pressure in sensor chamber 0.5 ... 1 bar above process pressure (max. 7 bar)
	For compressed air, rinse and calibration media (control air for retractable fitting)	for Unical multiplug
Limit switch	Contactless electrical limit position control in conjunction with Unical 9000/ Uniclean 900 or standard media interface ZU 0631	
Immersion depths / Dimensions	See dimension drawings	
Wetted materials	See product code	
Certificates	Inspection Certificate 3.1 (optional) ATEX II 1 GD c II	

Ceramat WA 153

Design Examples

Sensor with solid electrolyte, 225 mm

Sensor with liquid electrolyte, pressurizable, 250 mm

Optical probe Ø 12 mm or Ø 12.7 mm

Immersion Depth

Comparatively large immersion depth with a very compact design:

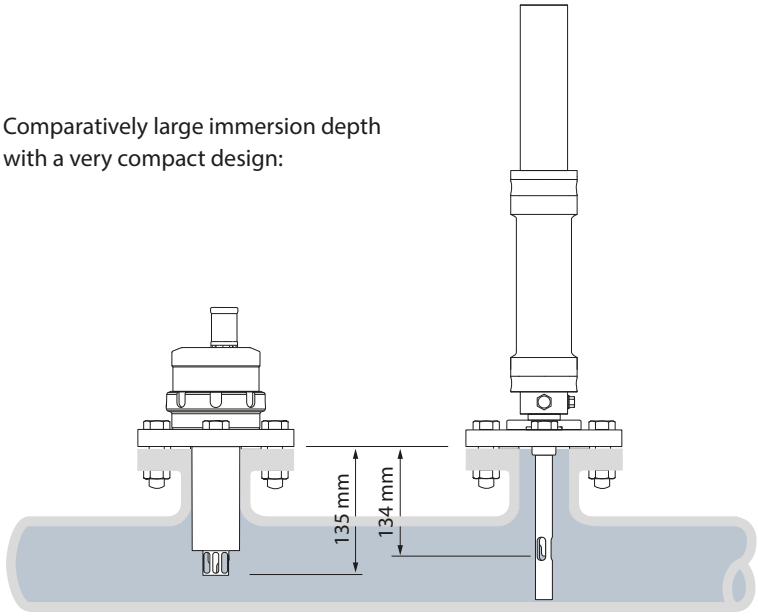

Ceramat

Conventional retractable fitting

Dimension Drawings

Ceramat WA 153 for sensors with liquid electrolyte

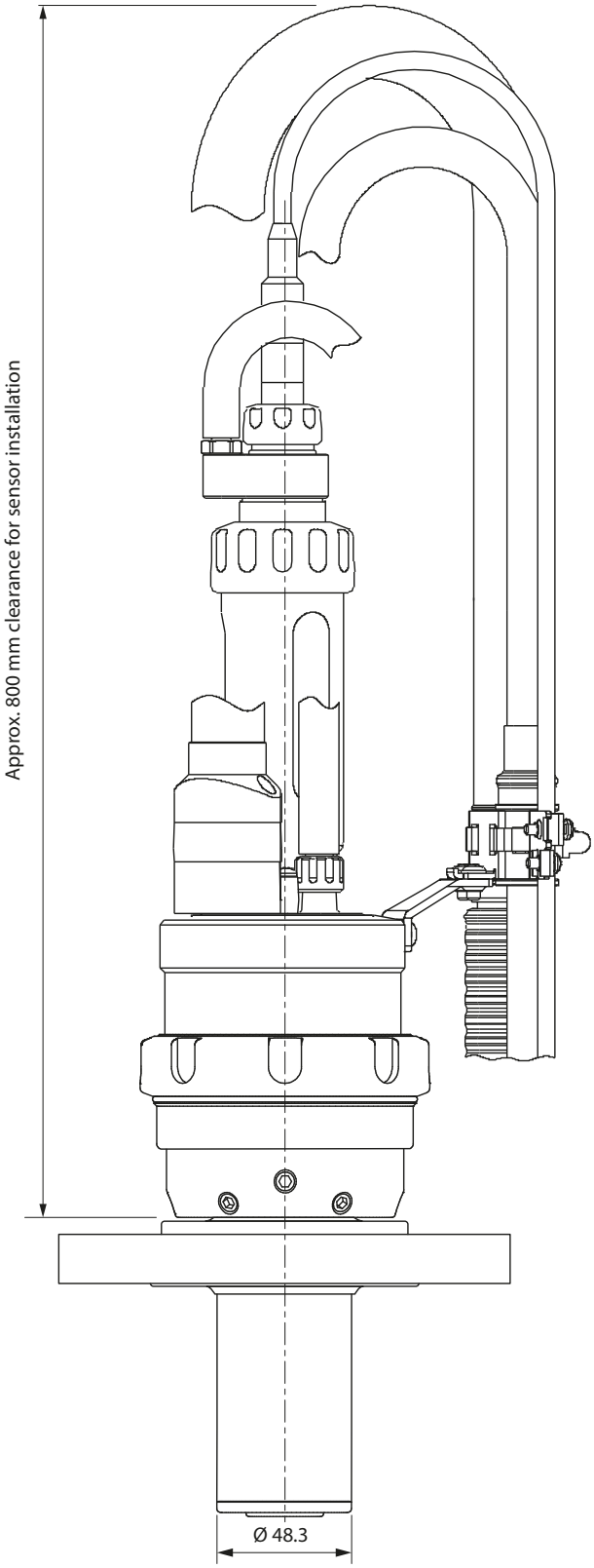

Ceramat WA 153 for sensors with solid electrolyte

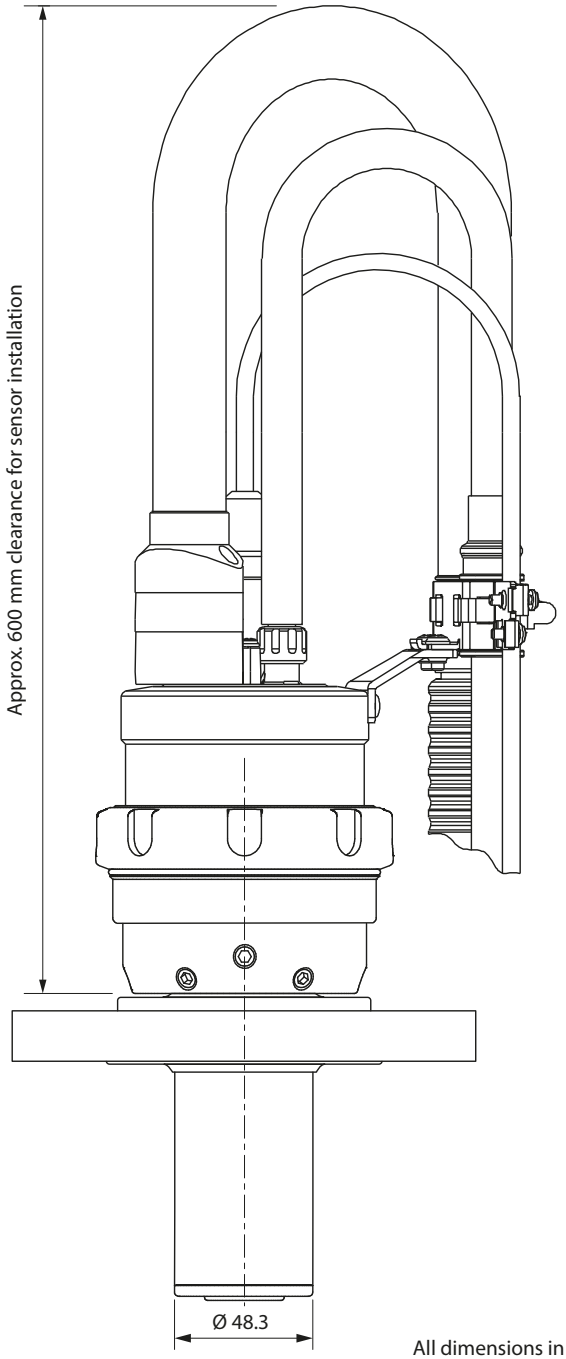

All dimensions in mm

Process Connection Design Examples

BioControl process connection

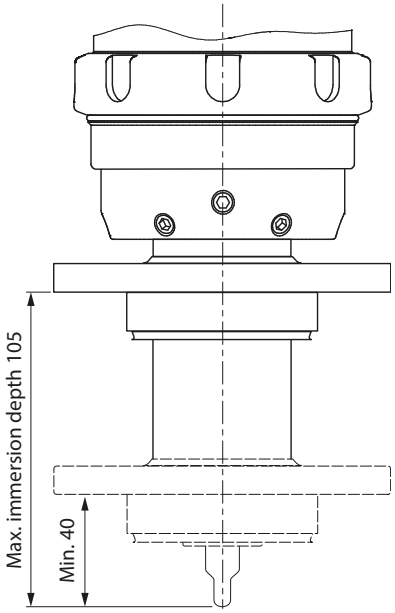

Tri-Clamp process connection

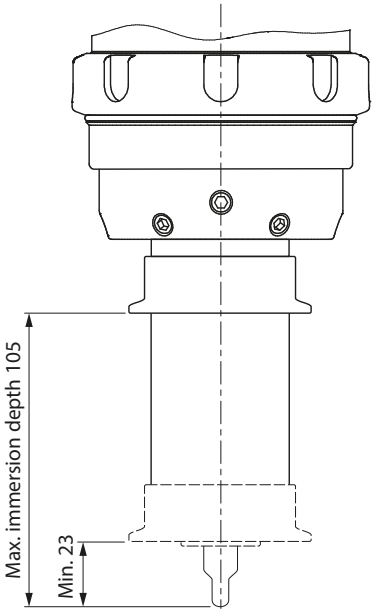

Varivent process connection

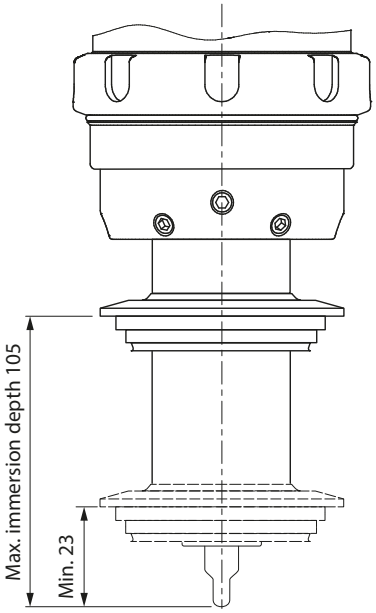

Flange process connection

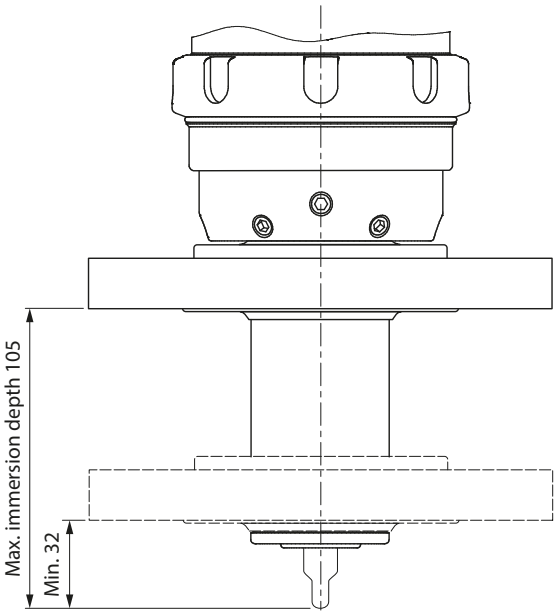

Dairy pipe process connection

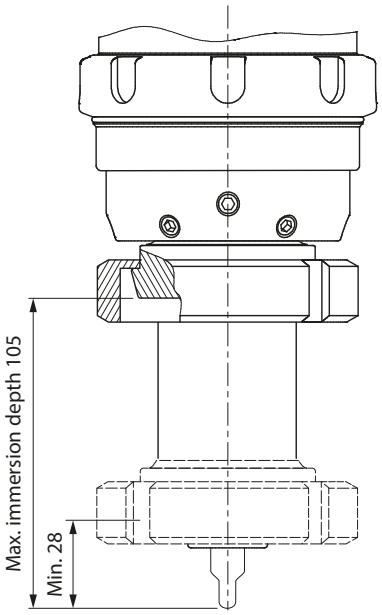

All dimensions in mm

Accessories for Ceramat WA 153

		Order no.
Mounting wrench for Ceramat		**ZU 0648**
Sensor mounting wrench, 19 mm		**ZU 0647**
Standard media (SM) interface, PP/FKM		**ZU 0631**
Standard media (SM) interface, PEEK/FKM		**ZU 0631/PEEK-FKM**
Standard media (SM) interface, PEEK/EPDM		**ZU 0631/PEEK-EPDM**
Standard media (SM) interface, PEEK/FFKM		**ZU 0631/PEEK-FFKM**
Pneumatically operated manual control valve		**ZU 0646**
Pneumatically controlled 3/8″ valve for additional medium		**ZU 0669**
Adapter for additional medium, PEEK/FKM		**ZU 0654/1**
Adapter for additional medium, PEEK/EPDM		**ZU 0654/2**
Adapter for additional medium, PEEK/FFKM		**ZU 0654/3**
Adapter for additional medium, steel 1.4571/FKM		**ZU 0655/1**
Adapter for additional medium, steel 1.4571/EPDM		**ZU 0655/2**
Adapter for additional medium, steel 1.4571/FFKM		**ZU 0655/3**
Air supply for pressurized sensors, 0.5 ... 4 bar		**ZU 0670/1**
Air supply for pressurized sensors, 1 ... 7 bar		**ZU 0670/2**
Hose, 20 m (extension for ZU 0670)		**ZU 0713**
Outlet hose	3.5 m	**ZU 0889**
	10 m	**ZU 0889-010**
Gaskets for Ceramat WA 153		**On request**
Sensor sockets for Ceramat WA 153		**On request**
Inspection Certificate 3.1 according to EN 10204		**ZU 0268/WA15n**

Check Valve for Ceramat WA 153

		RV01-			
Housing material, valve body	Stainless steel 1.4404	H			
	PEEK	E			
Gasket material	FKM		A		
	EPDM		B		
	FFKM		C		
	FKM FDA		F		
	EPDM FDA		E		
	FFKM FDA		H		
Inlet connection, female thread	G1/4			4	
	G1/8			8	
Outlet connection, male thread	G1/4				4
	G1/8				8